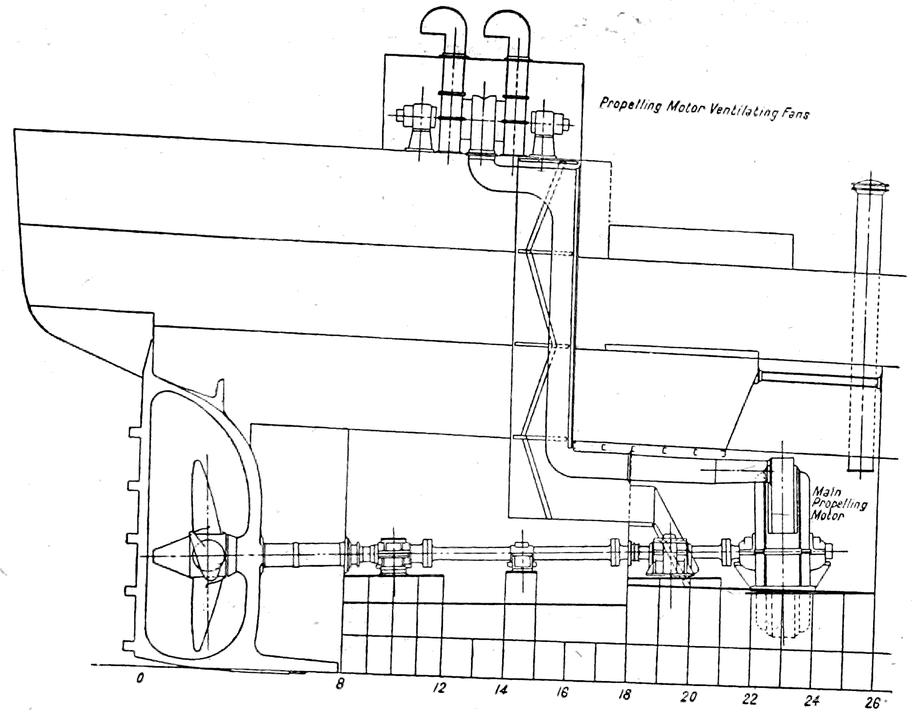

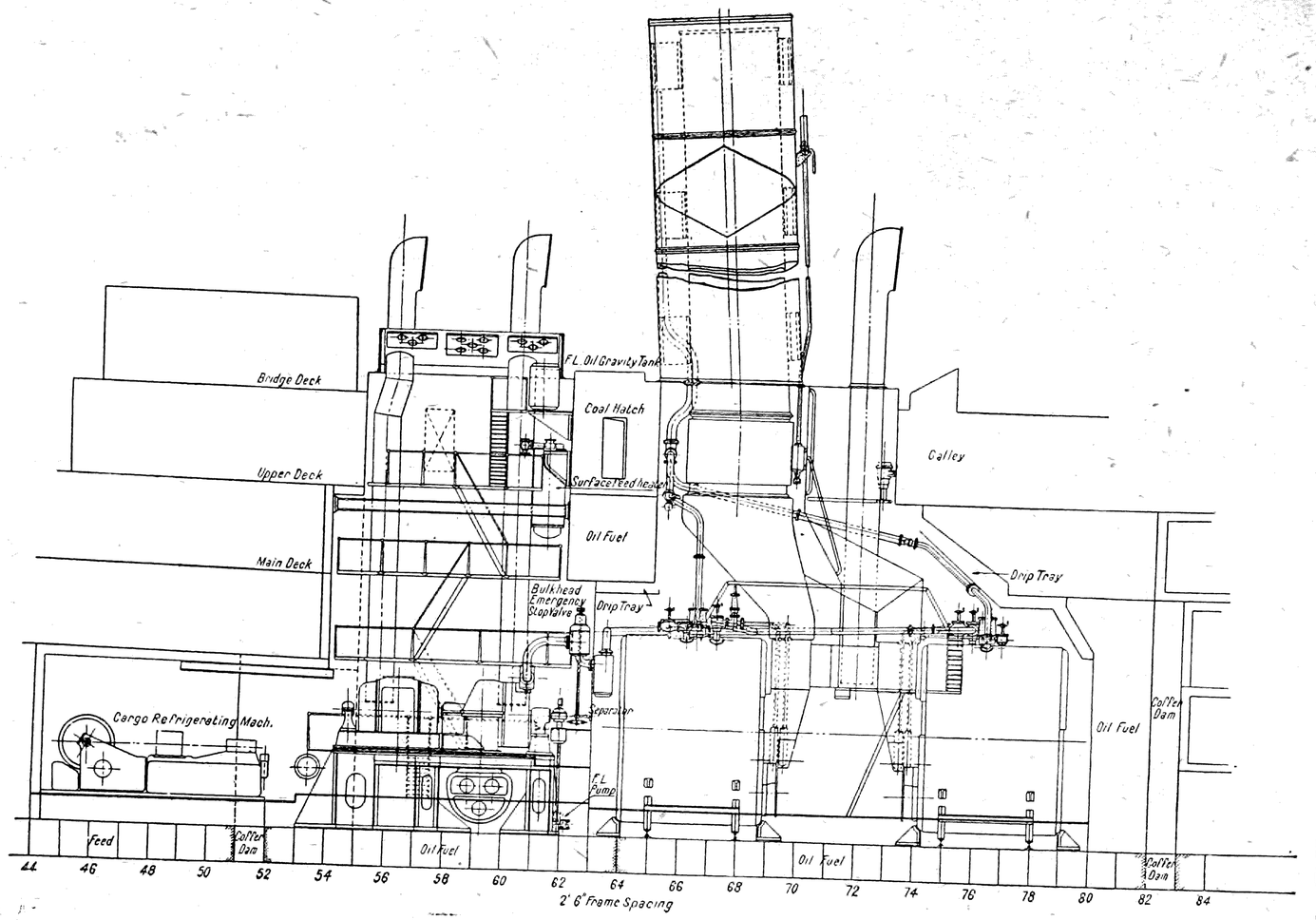

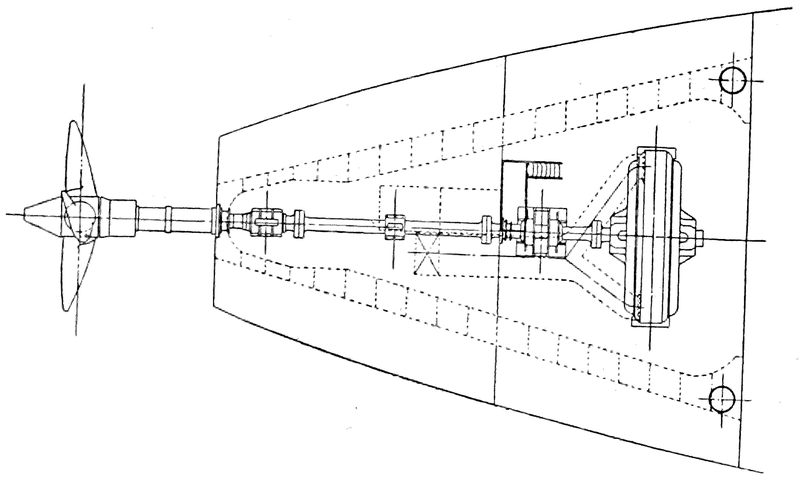

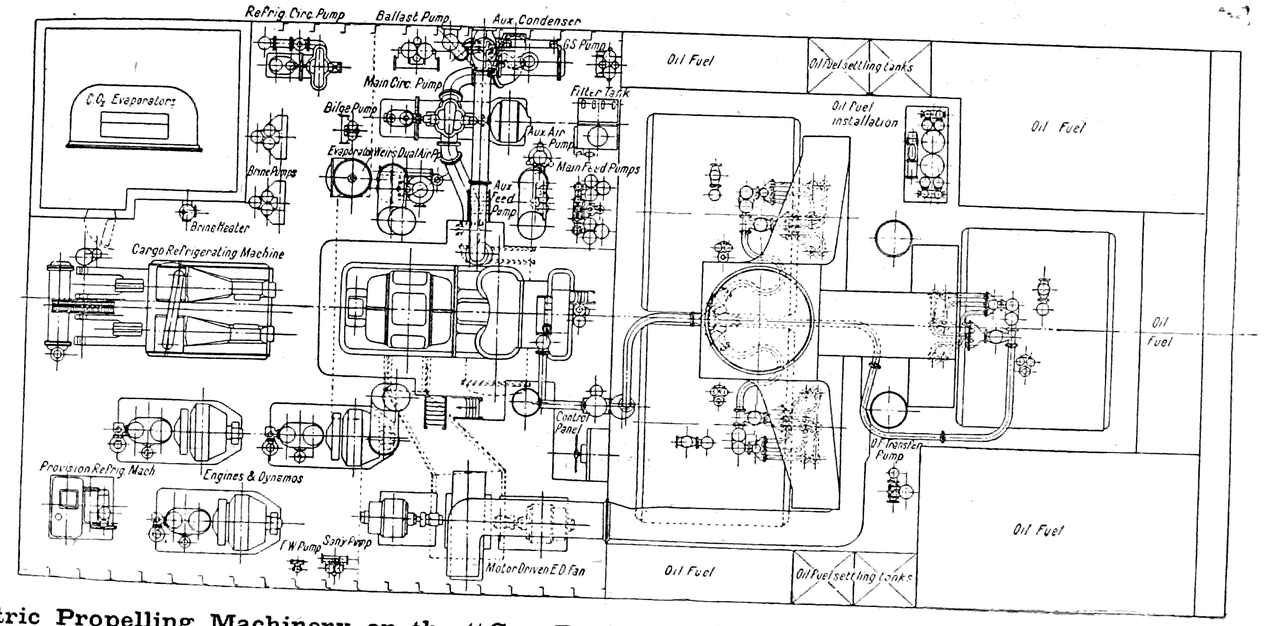

General Arrangement of Turbo-Electric Propelling Machinery on the "San Benito." (*See page* 320.)

This document, and more, is available for download from Martin's Marine Engineering Page - www.dieselduck.net